INNER RINGS - CBL..

SYLB ®

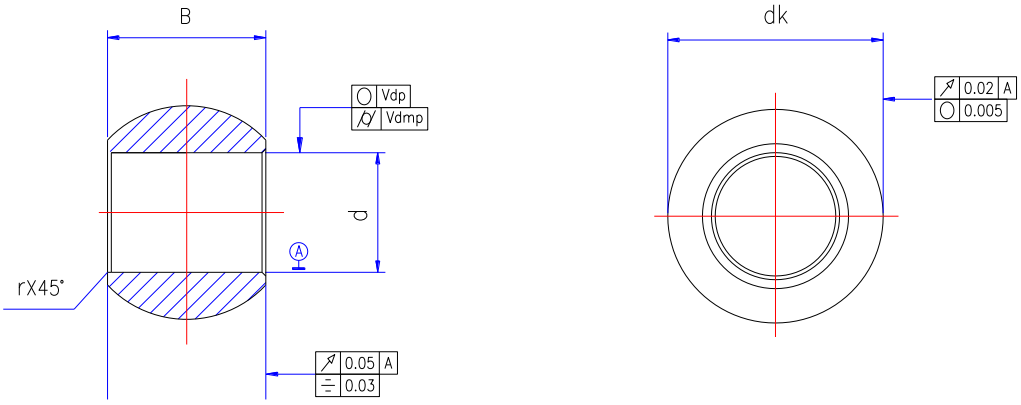

Bearing No. 型号	Dimensions in inches 尺寸 inch						Weight 重量
	d	B	dk	r	V dp	V dmp	
	+.0015 / -.0005	±.005		±.005	max	max	≈Lbs
CBL 3 DP	.1900	.312	.437	.01	.0015	.001	0.0086
CBL 4 DP	.2500	.375	.500	.01	.0015	.001	0.0117
CBL 5 DP	.3125	.437	.625	.01	.0015	.001	0.0222
CBL 6 DP	.3750	.500	.719	.01	.0015	.001	0.0323
CBL 7 DP	.4375	.562	.812	.01	.0015	.001	0.0451
CBL 8 DP	.5000	.625	.937	.01	.0015	.001	0.0689
CBL 10 DP	.6250	.750	1.125	.01	.0015	.001	0.1140
CBL 12 DP	.7500	.875	1.312	.01	.0015	.001	0.1751
CBL 16 DP	1.000	1.375	1.875	.01	.0015	.001	0.5731

Bearing No. 型号	Dimensions in millimeters 尺寸 mm						Weight 重量
	d	B	dk	r	V dp	V dmp	
	+0.038 / -0.013	±0.13		±0.13	max	max	≈kg
CBL 3 DP	4.826	7.92	11.10	0.25	0.038	0.025	0.0039
CBL 4 DP	6.350	9.53	12.70	0.25	0.038	0.025	0.0053
CBL 5 DP	7.938	11.10	15.88	0.25	0.038	0.025	0.0101
CBL 6 DP	9.525	12.70	18.26	0.25	0.038	0.025	0.0147
CBL 7 DP	11.113	14.27	20.62	0.25	0.038	0.025	0.0205
CBL 8 DP	12.700	15.88	23.80	0.25	0.038	0.025	0.0313
CBL 10 DP	15.875	19.05	28.58	0.25	0.038	0.025	0.0518
CBL 12 DP	19.050	22.23	33.32	0.25	0.038	0.025	0.0796
CBL 16 DP	25.400	34.93	47.63	0.25	0.038	0.025	0.2605

Bearing steel or Stainless steel, hardened, ground, polished, chrome plated

轴承钢或不锈钢, 淬火, 磨加工, 抛光,镀硬铬